Voltena
SOLAR LIGHTING

Solar Flood Light

VOL100 · 100W

The product uses solar energy as electric energy supply to provide illumination, and the solar panel is used for converting solar energy into electric energy to charge a storage battery; This product uses efficient LED light source design, with high luminous intensity, accurate beam, irradiation distance, green and environmental protection, simple installation, stable and reliable work, no cable, no consumption of conventional energy, long service life and other characteristics.



Solar charging
5V 10W panel

IP65
Dust & water protected

50,000 h
Service life

148 × SMD5730
905.8 lm output

Product Parameters

Electrical & Solar	
Model	**VOL100**
Rated power	**100 W ± 5%**
Input voltage	**DC 5 V**
Output voltage	**DC 3.2 V**
Photovoltaic panel	**5 V 10 W**
Battery	**10000 mA**
Protection class	**III**
Installation	**Wall-mounted, fixed**

Optical	
LED	**SMD 5730**
LED quantity	**148 pcs**
CCT	**8000–8500 K**
CRI (Ra)	**> 70**
Color tolerance	**SDCM < 7**
Lumen package	**905.8 lm**

Mechanical & Environment	
Material	**Aluminium + glass**
Lamp color	**Speckled sand grey**
Size (L×W×D)	**230 × 240 × 44.5 mm**
Product weight	**0.983 kg**
Gross weight / unit	**2.04 kg**
IP grade	**IP65**
Salt spray test	**24 h**
Operating temperature	**-15 to 45 °C**
Service life	**50,000 h**
Compliance	**RoHS**

Packaging	
Inner box	**330 × 220 × 70 mm**
Carton	**450 × 300 × 345 mm**
Units per carton	**8 pcs**
Carton gross weight	**16.96 kg**

VOL100 · Solar Flood Light
Product datasheet

Voltena
SOLAR LIGHTING

Product Display



Front view



Side view



Back view



Schematic

Product Size

Unit: mm

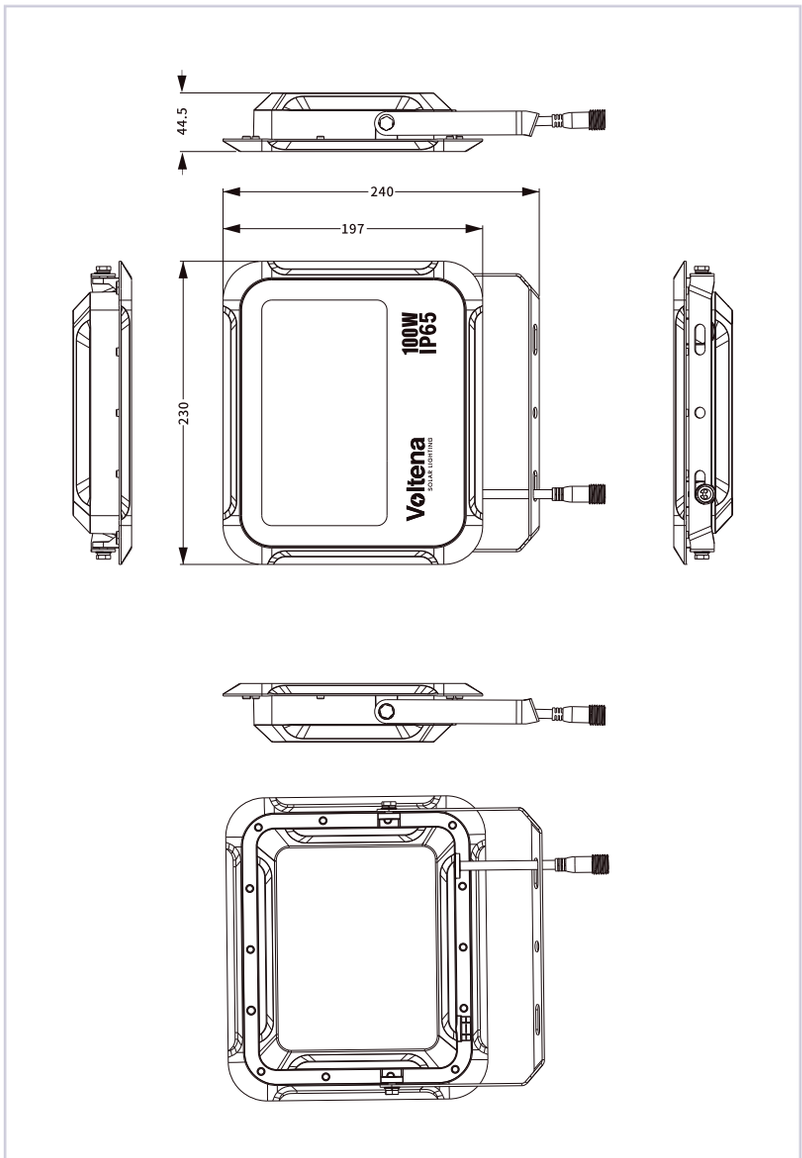

Key dimensions

Overall size
240 × 230 × 44.5 mm

Lamp height
240 mm

Glass window height
197 mm

Lamp width
230 mm

Depth (without bracket)
44.5 mm

Product weight
0.983 kg

VOL100 · Solar Flood Light
Product datasheet

Voltena
SOLAR LIGHTING

Product Details Display

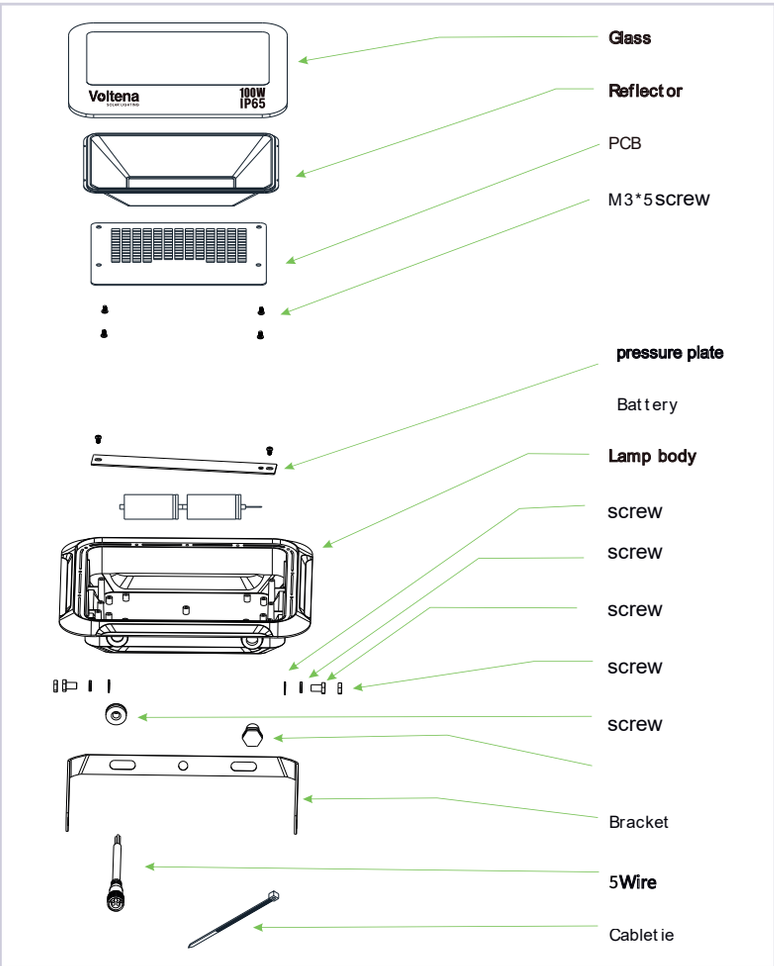

Key components

- **Glass**
  Toughened front cover protecting the optics
- **Reflector**
  Directs and shapes the beam
- **PCB**
  LED board, SMD 5730 × 148 pcs
- **Pressure plate**
  Holds the PCB firmly in place
- **Battery**
  Storage cells charged by the solar panel (10000 mA)
- **Lamp body**
  Aluminium housing, IP65
- **Bracket**
  Adjustable wall-mount bracket
- **Wire**
  Photovoltaic panel cable with connector
- **Cable tie**
  Cable management

Fasteners: M3×5 screws, plus lamp-body screws.

Light / Color Test Report

Sample measurement

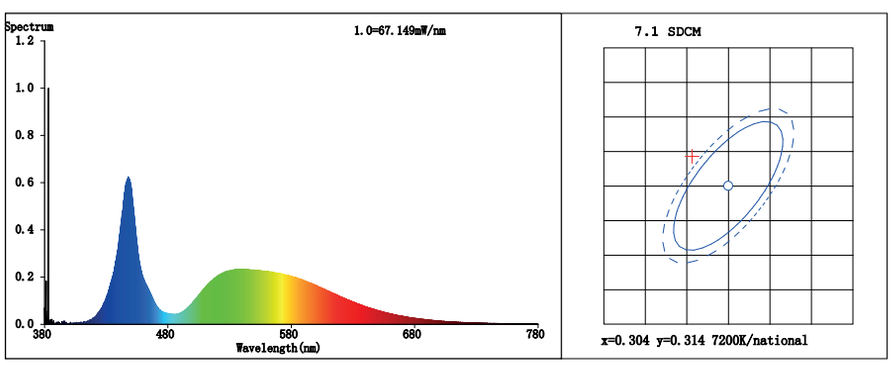

Luminous flux	**905.8 lm**
Radiant flux	**2.854 W**
Chromaticity (x, y)	**0.2996, 0.3183**
Measured CCT	**7413 K (Duv 0.0046)**
Dominant WL	**485.8 nm**
FWHM	**16.6 nm**
CRI Ra	**70.2**
R9	**-36**

Color rendering indices

R1	R2	R3	R4	R5	R6	R7	R8	R9	R10	R11	R12	R13	R14	R15
69	**72**	**74**	**72**	**71**	**64**	**79**	**61**	**-36**	**34**	**71**	**38**	**68**	**85**	**64**

VOL100 · Solar Flood Light
Product datasheet

Voltena
SOLAR LIGHTING

Product Installation Method

8 steps

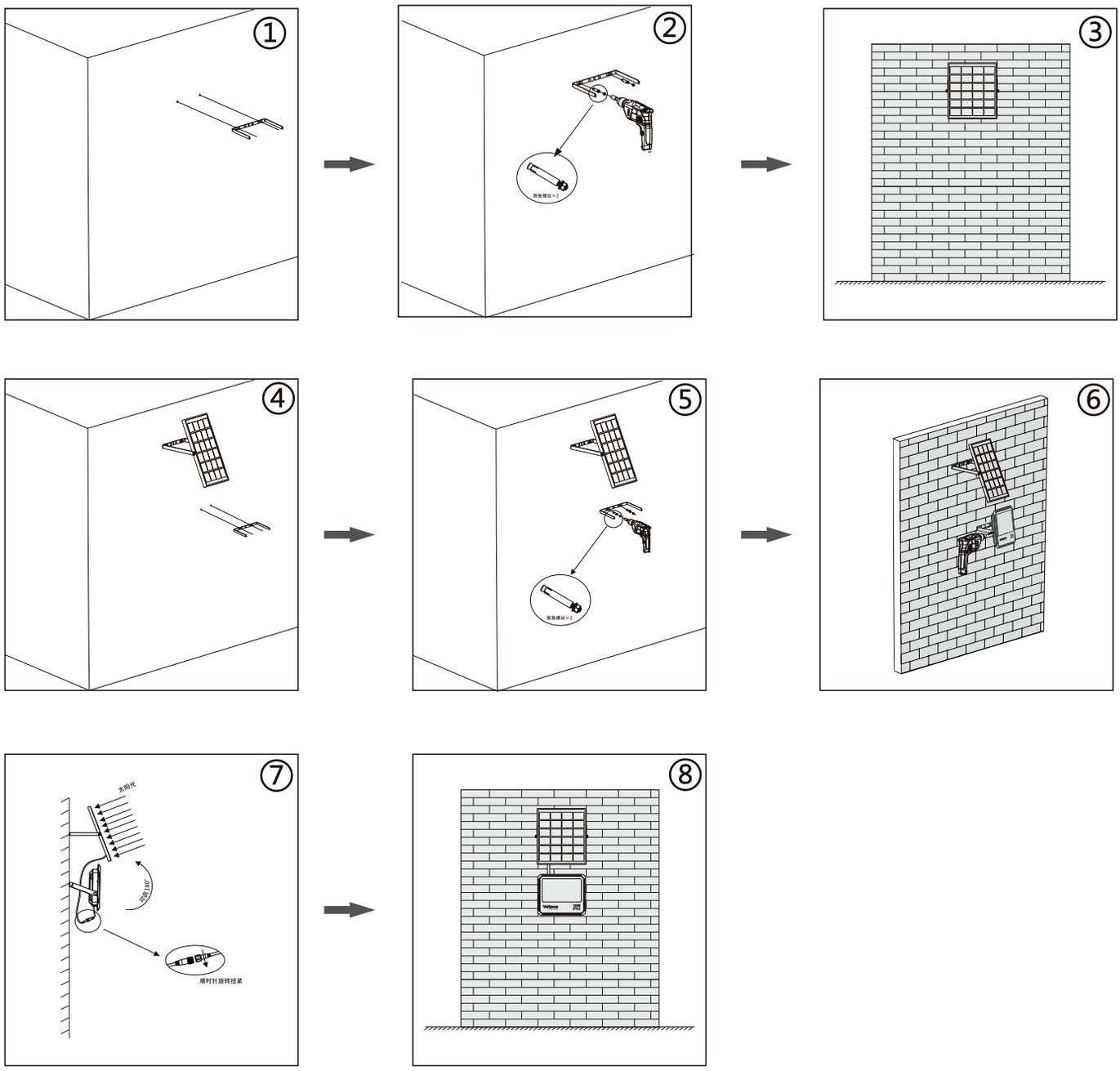

What's in the Box

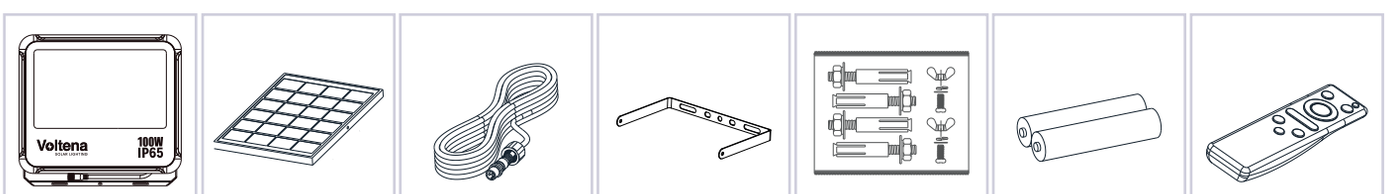

Lamp body	Solar panel	PV panel cable	Bracket	Accessory kit	Battery	Remote control
×1	×1	×1	×1	×1 set	×1 set	×1

Packing & Logistics

Unit: mm

Packing item	Specification	Quantity
Color box	330 × 220 × 70 mm	1 per unit
Outer carton	450 × 300 × 345 mm · K636K	8 units per carton
EPE foam	280 × 175 × 60 mm	1 per unit

Unit packing sequence

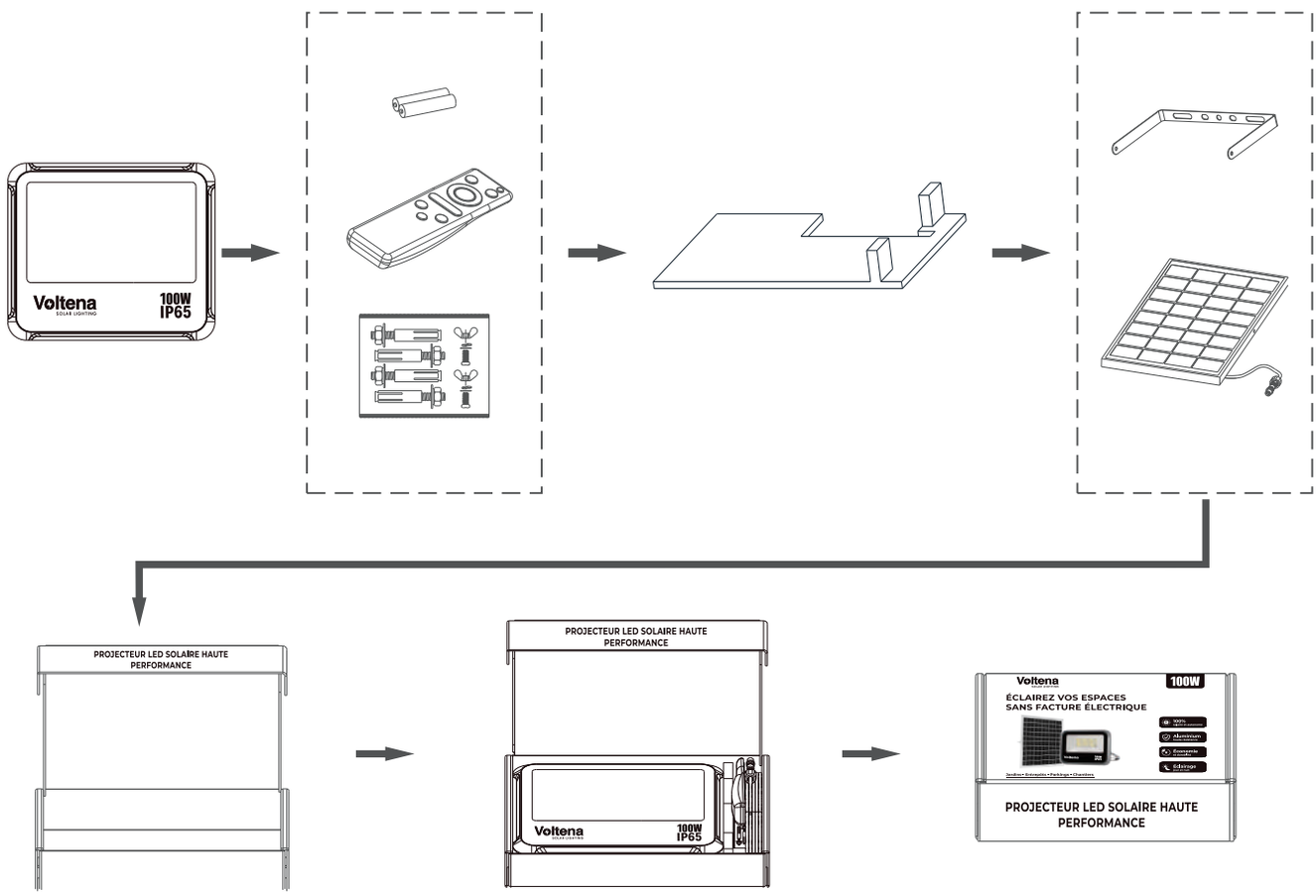

Carton packing sequence

