Voltena
SOLAR LIGHTING

Solar Flood Light

VOL400 · 400W

The product uses solar energy as electric energy supply to provide illumination, and the solar panel is used for converting solar energy into electric energy to charge a storage battery; This product uses efficient LED light source design, with high luminous intensity, accurate beam, irradiation distance, green and environmental protection, simple installation, stable and reliable work, no cable, no consumption of conventional energy, long service life and other characteristics.



Solar charging
5V 25W panel

IP65
Dust & water protected

50,000 h
Service life

698 × SMD5730
2616 lm output

Product Parameters

Electrical & Solar	
Model	**VOL400**
Rated power	**400 W ± 5%**
Input voltage	**DC 5 V**
Output voltage	**DC 3.2 V**
Photovoltaic panel	**5 V 25 W**
Battery	**25000 mA**
Protection class	**III**
Installation	**Wall-mounted, fixed**

Optical	
LED	**SMD 5730**
LED quantity	**698 pcs**
CCT	**8000–8500 K**
CRI (Ra)	**> 70**
Color tolerance	**SDCM < 7**
Lumen package	**2616 lm**

Mechanical & Environment	
Material	**Aluminium + glass**
Lamp color	**Speckled sand grey**
Size (L×W×D)	**336 × 360.5 × 46 mm**
Product weight	**2.4 kg**
Gross weight / unit	**4.04 kg**
IP grade	**IP65**
Salt spray test	**24 h**
Operating temperature	**-15 to 45 °C**
Service life	**50,000 h**
Compliance	**RoHS**

Packaging	
Inner box	**410 × 370 × 70 mm**
Carton	**425 × 370 × 385 mm**
Units per carton	**5 pcs**
Carton gross weight	**20.8 kg**

VOL400 · Solar Flood Light
Product datasheet

Voltena
SOLAR LIGHTING

Product Display



Front view



Side view



Back view



Schematic

Product Size

Unit: mm

Product size:336×360.5×46mm

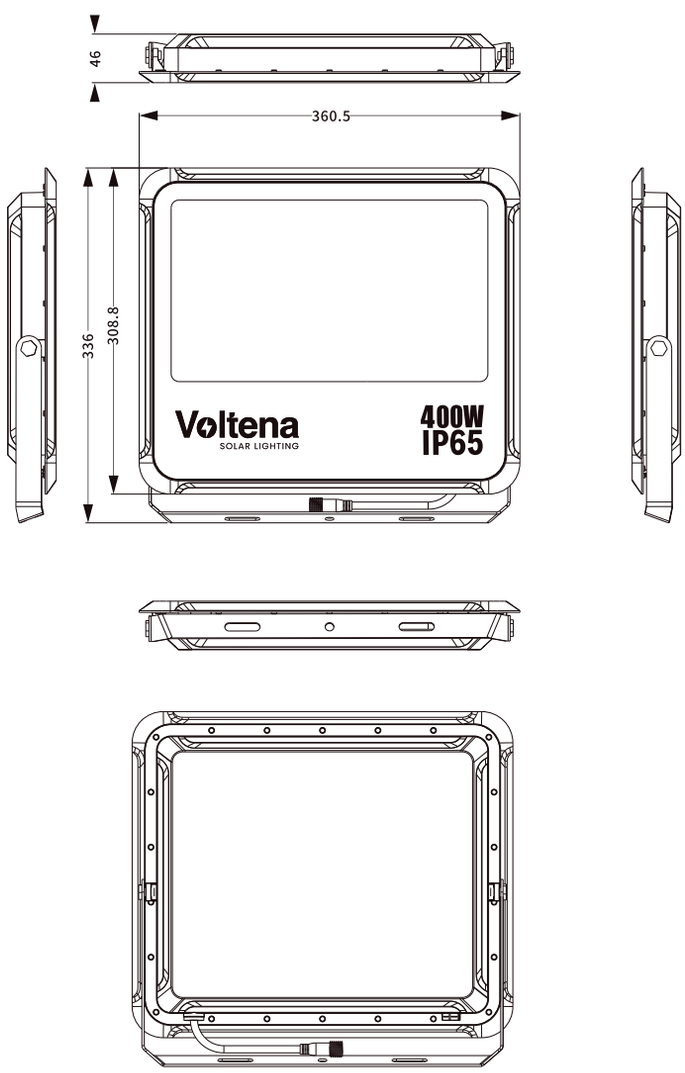

Key dimensions

Overall size
336 × 360.5 × 46 mm

Lamp height
336 mm

Glass window height
308.8 mm

Lamp width
360.5 mm

Depth (without bracket)
46 mm

Product weight
2.4 kg

VOL400 · Solar Flood Light
Product datasheet

Voltena
SOLAR LIGHTING

Product Details Display

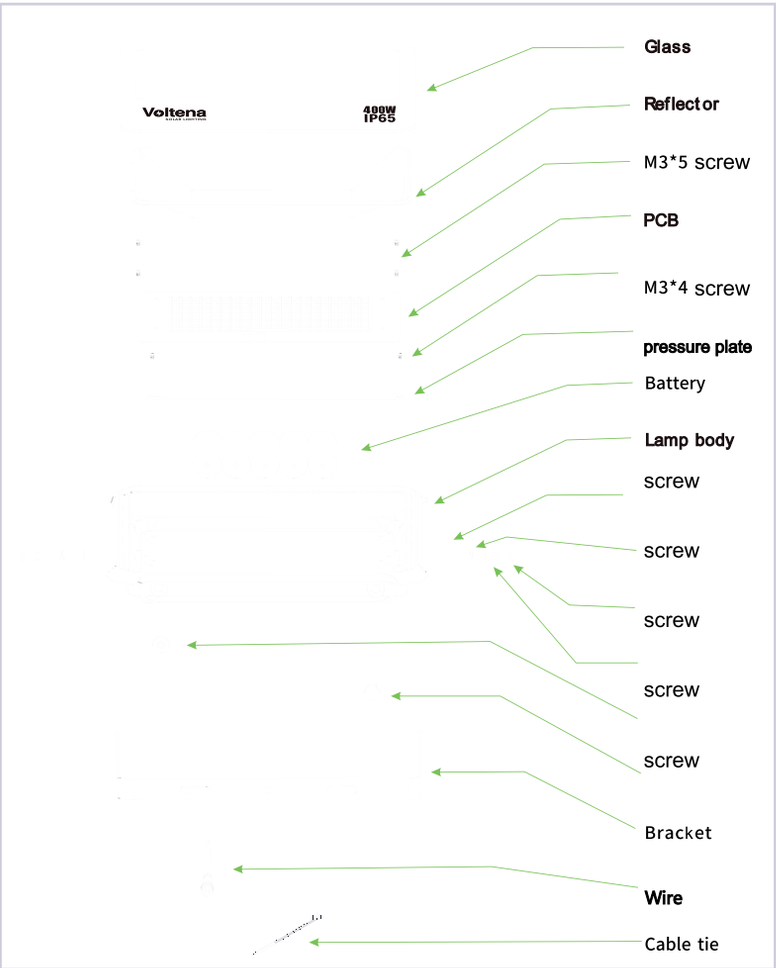

Key components

- **Glass**
  Toughened front cover protecting the optics
- **Reflector**
  Directs and shapes the beam
- **PCB**
  LED board, SMD 5730 × 698 pcs
- **Pressure plate**
  Holds the PCB firmly in place
- **Battery**
  Storage cells charged by the solar panel (25000 mA)
- **Lamp body**
  Aluminium housing, IP65
- **Bracket**
  Adjustable wall-mount bracket
- **Wire**
  Photovoltaic panel cable with connector
- **Cable tie**
  Cable management

Fasteners: M3×5 and M3×4 screws, plus lamp-body screws.

Light / Color Test Report

Sample measurement

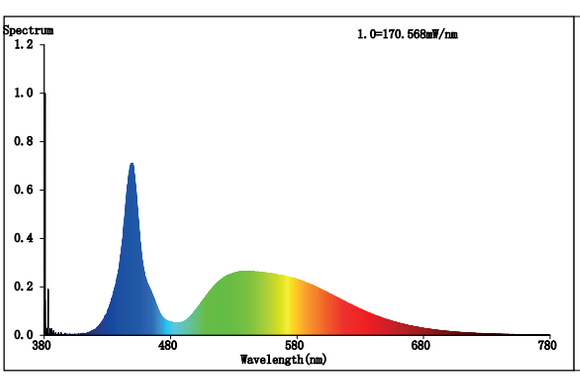

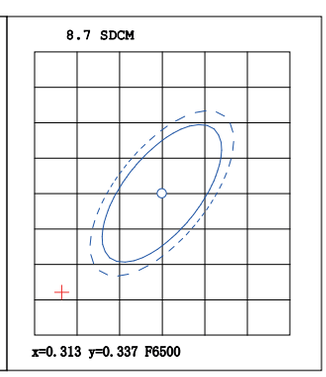

Luminous flux	**2616 lm**
Radiant flux	**8.141 W**
Chromaticity (x, y)	**0.3012, 0.3230**
Measured CCT	**7235 K (Duv 0.0061)**
Dominant WL	**487.5 nm**
FWHM	**15.4 nm**
CRI Ra	**70.7**
R9	**-38**

Color rendering indices

R1	R2	R3	R4	R5	R6	R7	R8	R9	R10	R11	R12	R13	R14	R15
68	74	76	72	70	65	81	60	-38	36	70	36	69	87	63

VOL400 · Solar Flood Light
Product datasheet

Voltena
SOLAR LIGHTING

Product Installation Method

8 steps

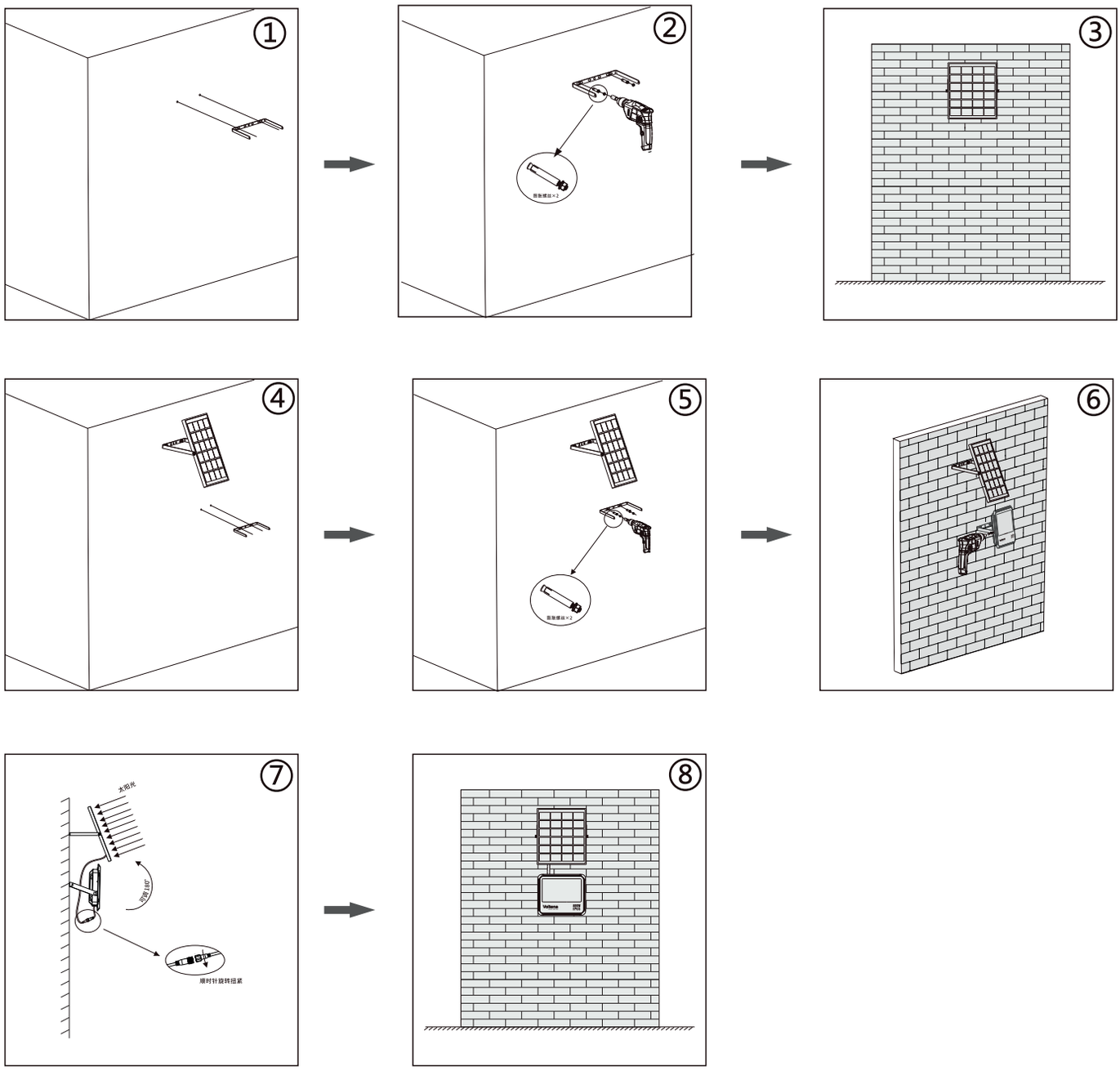

What's in the Box

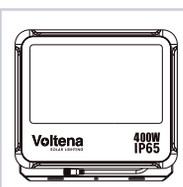			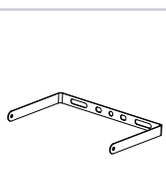	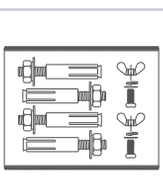	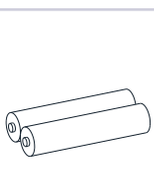	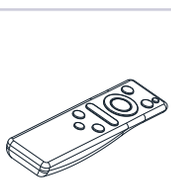
Lamp body ×1	**Solar panel** ×1	**PV panel cable** ×1	**Bracket** ×1	**Accessory kit** ×1 set	**Battery** ×1 set	**Remote control** ×1

Packing & Logistics

Unit: mm

Packing item	Specification	Quantity
Color box	410 × 310 × 70 mm	1 per unit
Outer carton	425 × 370 × 385 mm · K636Kzzzz	5 units per carton
EPE foam	360 × 330 × 60 mm	1 per unit

Unit packing sequence

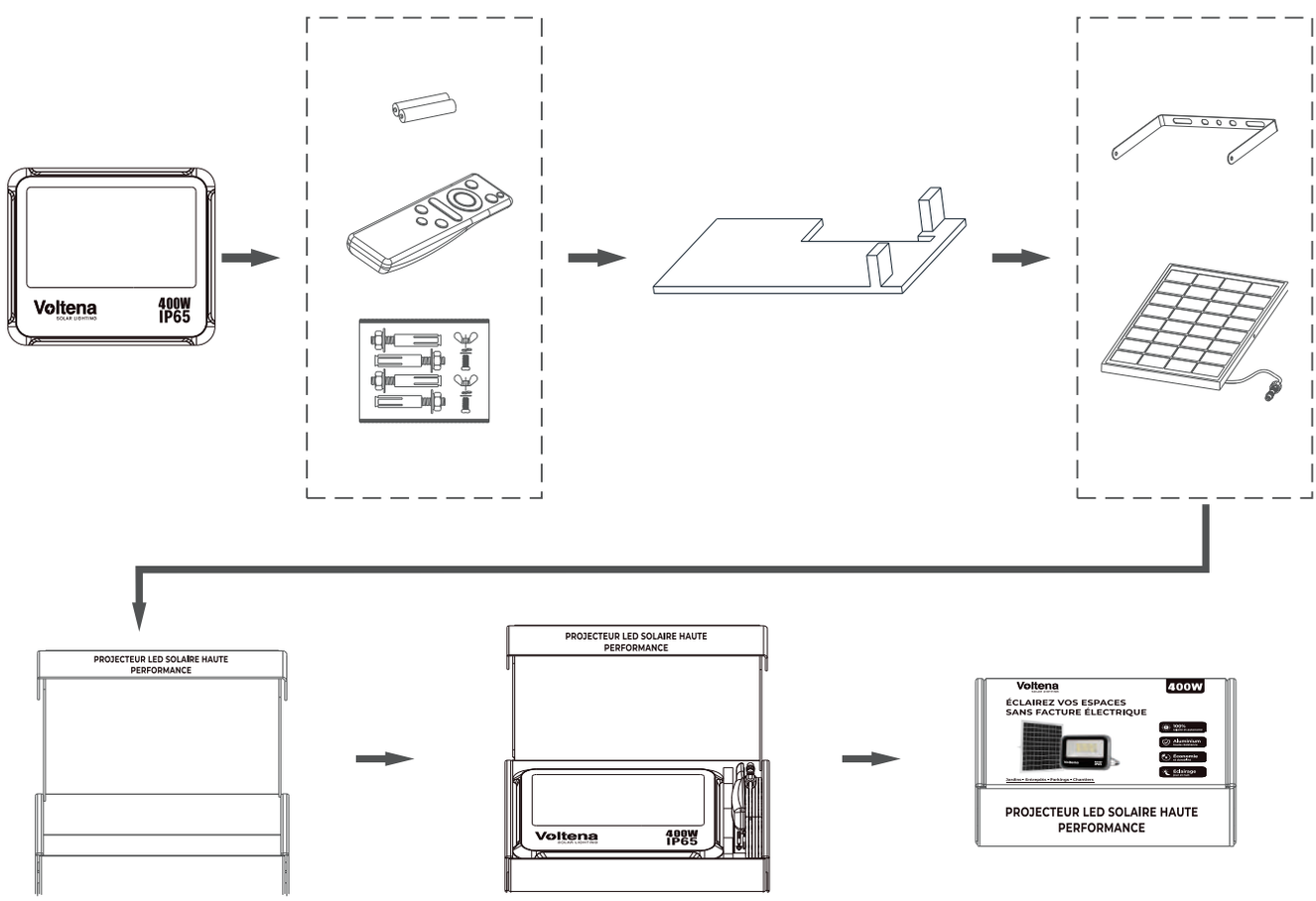

Carton packing sequence

